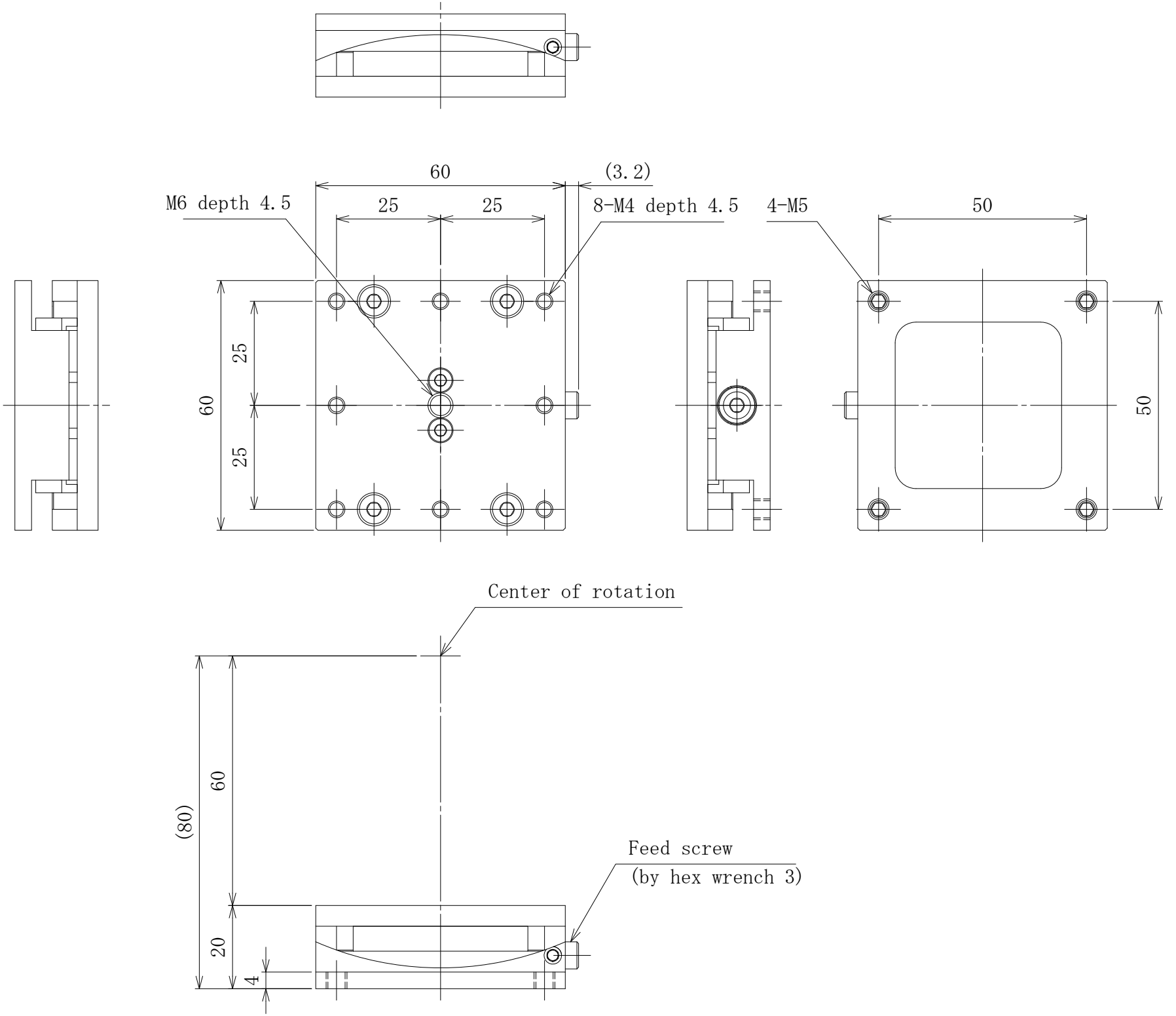
60
(3.2)
M6 depth 4.5
25
25
8-M4 depth 4.5
4-M5
50
25
60
25
50
Center of rotation
60
(80)
Feed screw
(by hex wrench 3)
20
4